TEAC®

AN-80

NOISE REDUCTION UNIT
SERVICE MANUAL

The TEAC AN-80 is a DOLBY B system noise reduction unit primarily designed for use with a tape deck having 2 magnetic heads.
The circuit composition is such that playback and record mode selection is accomplished by a changeover switch. Although the unit may be used with a three head type deck continuous monitoring is not possible however the recording check function provides momentary monitoring of the recording process. The unit is remarkably easy to operate and adjust.

This manual describes for the benefit of service engineers, the adjustment, inspection and calibration procedures. Explanations which duplicate those in the instruction(owners) manual and those concerning the theory of operation have been omitted. Should you encounter difficulty during repair or service of this unit, contact the nearest TEAC dealer or field office.

TEAC CORPORATION

SALES OFFICE: SHINJUKU BUILDING
1-8-1, NISHI-SHINJUKU, SHINJUKU, TOKYO

TEAC HONGKONG LIMITED MAIN OFFICE: ROOM NO. 1105
MELBOURNE PLAZA, 33 QUEEN'S ROAD
CENTRAL, HONG KONG

U.S. DISTRIBUTOR: TEAC CORPORATION OF AMERICA
7733 TELEGRAPH ROAD
MONTEBELLO, CALIFORNIA 90640
U.S.A.

EUROPEAN DISTRIBUTOR: TEAC EUROPE B.V.
KABELWEG 45-47, AMSTERDAM-W. 2,
HOLLAND

MA0800E300

SERVICE DATA

OVERALL ELECTRICAL CHARACTERISTICS

Frequency Response:	30Hz∿13kHz ±2dB	At level below DOLBY reference level
Increased SN Ratio:	10dB or better at 10kHz 5dB or better at 1kHz Overall 6dB or better	"B" weighted measurement
Input Sensitivity:	Line input 30mV±2dB	Minimum input voltage required for reference level
Input Impedance:	35kΩ or more	Line input
Output Level:	Line output 580mV±2dB	Load resistance 50kΩ or more
Maximum Output Voltage:	2.3V or more	Load resistance 50kΩ or more
Output Impedance:	6kΩ or more	At monitor terminal reference level
Harmonic Distortion Factor:	0.5% or less	
Multiplex Filter:	19kHz -35dB or less -30dB or less at 38kHz	
SN Ratio:	60dB or better	
Calibration Oscillator: Level variation	±1dB or less	
Oscillation Frequency:	400Hz±15%	

RECORD MODE CHARACTERISTICS

Frequency Response:	10kHz: +10dB±1dB 1kHz: 5.5dB±1dB 30Hz∿15kHz±1.5dB	At reference level
Record Input Sensitivity:	30mV±2dB	Minimum input voltage required for reference output level
Input Impedance:	35kΩ or more	
Record Output Level	580mV±2dB	Load resistance 50kΩ or more
Maximum Record Output Level:	2.3V or more	Load resistance 50kΩ or more
Output Impedance	3kΩ or less	
Harmonic Distortion Factor:	0.5% or less	At reference level
Multiplex Filter:	-18dB or less at 19kHz -13dB or less at 38kHz	
SN Ratio:	60dB or better	Input terminal shorted with 4.7kΩ

PLAYBACK MODE CHARACTERISTICS

Frequency Response:	10kHz: -10dB±1dB 1kHz: -5.5dB±1dB 30Hz∿15kHz±1.5dB	
Playback Input Sensitivity:	30mV±2dB	Minimum input voltage required for reference level
Input Impedance:	35kΩ or more	
Playback Output Level:	50mV±2dB	Load resistance 50kΩ or more
Maximum playback output Level:	2.3V or more	Load resistance 50kΩ or more
Playback Output Impedance:	6kΩ or less	
Harmonic Distortion Factor:	0.5% or less	At reference level
Multiplex Filter:	-20dB or less at 19kHz -20dB or less at 38kHz	
SN Ratio:	60dB or better	Input terminal shorted with 4.7kΩ
Power Supply:	100V 50/60Hz	U.S. model 117V AC 50/60Hz
Power Consumption:	4W	
AC Outlet:	500W maximum	Power switch not interlocked
Overall Dimensions:	3.4" × 16.1" × 10.7"	
Weight:	8.8 lbs (4 kg)	

Performance data and specifications subject to change with future modifications.

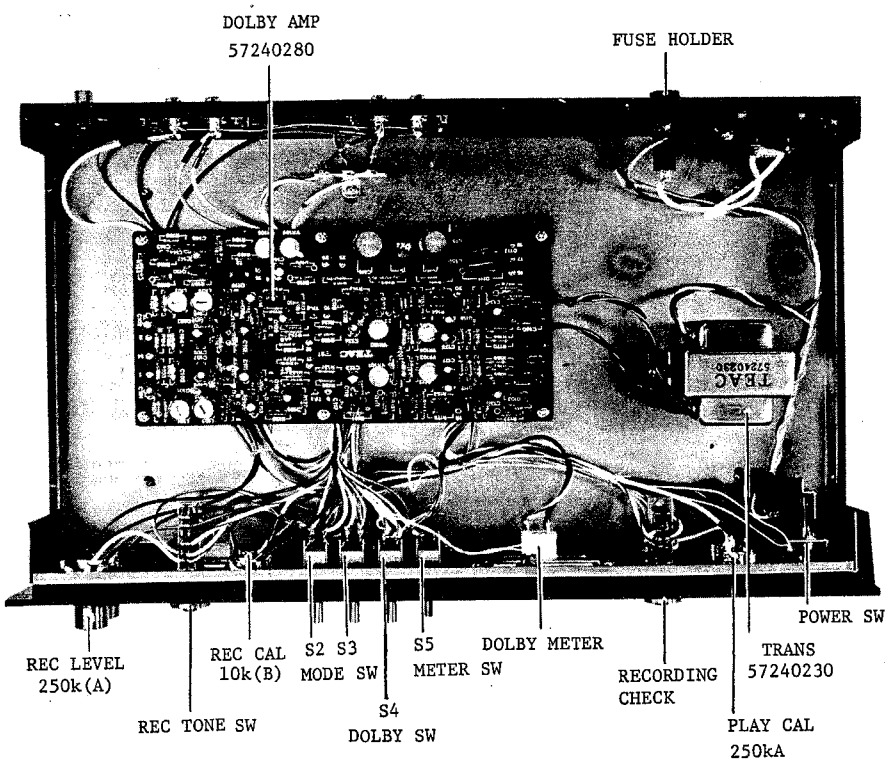

CHASSIS LAYOUT

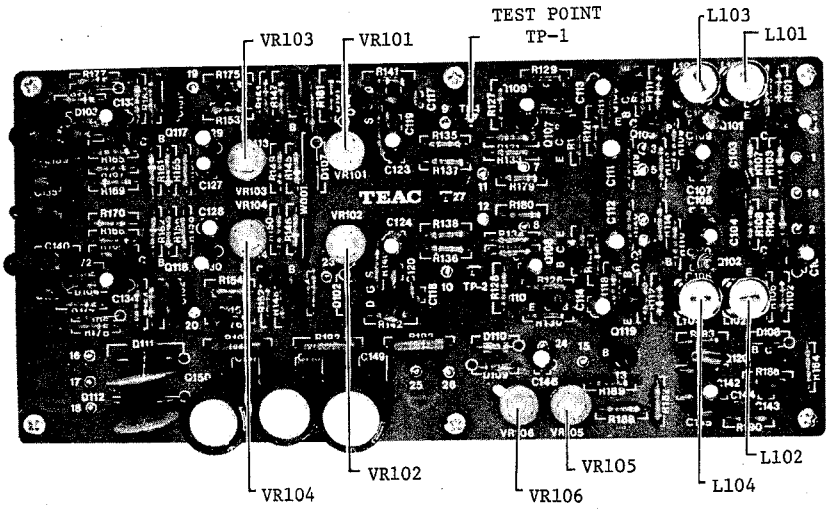

ADJUSTABLE PARTS LOCATION

PRECAUTIONS

When adjusting the AN-80, use special care to eliminate induction hum, not to mention general precautions which should be observed when servicing precision equipment.

When adjusting a semi-fixed variable resistor, be sure to use a screw driver with an insulated handle.

0 dB = 0.775 V

INSPECTION AND ADJUSTMENT

LEVEL METER SENSITIVITY TEST (DOLBY LEVEL METER)

Depress the REC TONE switch and check for conformance with the illustration. If the pointer is not within the specified range, adjust with VR-106.
Before performing this adjustment, measure the voltage from TP-1 to ground. Indicated reading should be 100 mV.

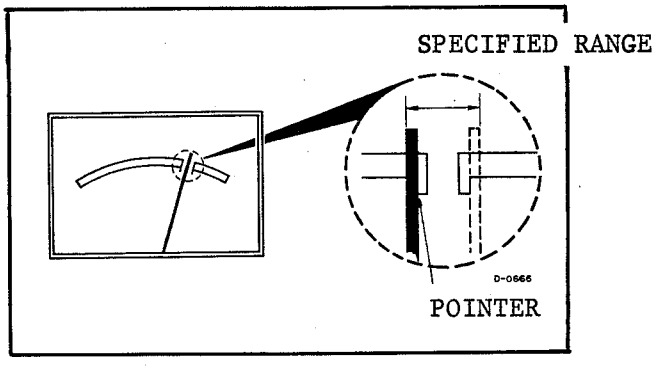

RECORD CHARACTERISTIC TEST

- Connect the test equipment as shown in the diagram.

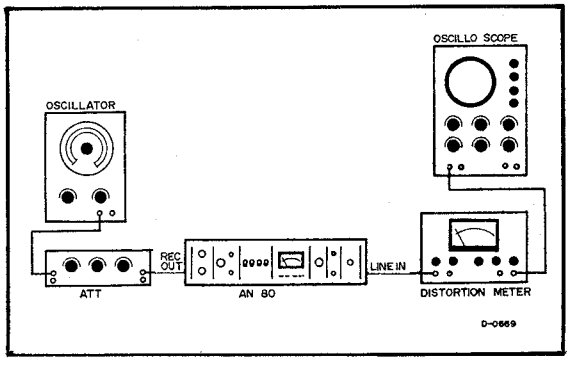

Setting Specified Level

- Place the REC CAL variable resistor of the AN-80 in the fully clockwise position. Set the MODE switch to REC. Set the DOLBY switch to IN and the METER switch to L.
- Set the AF oscillator frequency at 100 Hz and adjust the ATT so the AN-80 meter's pointer will indicate the reference level. Make certain that the pointer is in the position shown in LEVEL METER SENSITIVITY TEST.
- The distortion factor meter reading at this point should be regarded as 0 dB when measuring the frequency response or SN ratio, or as 100% when measuring the distortion factor.

SN RATIO IMPROVEMENT

- Connect the test equipment as shown in the diagram.

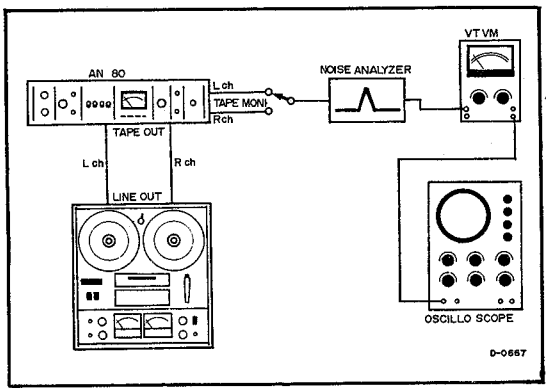

Setting Specified Level

- Load the test tape (product No. 69911008-00) supplied with the AN-80 and play it back.
- Adjust the OUTPUT variable resistor of the tape deck so the VU meter of the tape deck will indicate 0 VU.
- Set the MODE switches of the AN-80 to PLAY and the METER switch to L. Adjust the L channel PLAY CAL variable resistor so the level meter's pointer will indicate the reference level position.
- Repeat the same procedures for R channel.

SN Ratio Improvement Measurement

- Load a tape erased with a eraser and select the playback mode.
- Set the noise analyzer frequency at 1 kHz. Set the AN-80 DOLBY switch to OFF, measure the noise level, and record the measured value. The difference between the values is the noise improvement at 1 kHz. Repeat the same procedures for R channel.
- Set the noise analyzer frequency at 10 kHz and determine the difference between the ON and OFF values as in the foregoing section.

ADJUSTMENT PROCEDURE

Test Equipment Required

AF Oscillator (20 Hz to 50 kHz or more)
AC Voltmeter Input impedance 100kΩ or more
  Frequency response 20 Hz to 50 kHz or more
Attenuator
Oscilloscope
"B" Weighting Network or Noise Analyzer

AN-80 Built-in Oscillator Level Adjustment

- The purpose of this adjustment is to set the output level of the internal calibration oscillator of the AN-80.
- Connect the AC voltmeter between the test point (TP-1) terminal on the amplifier PC board of the AN-80 and the ground (27).
- Set the L channel MODE switch to REC.
- While depressing the REC TONE switch, adjust VR-105 so the AC voltmeter will indicate 100 mV.

Level Meter Sensitivity Adjustment

Adjust the sensitivity of the AN-80 level meter using the internal test oscillator.

- While depressing the REC TONE switch, adjust VR-106 so the pointer will come to the position shown.
  (Refer to illustration below.)

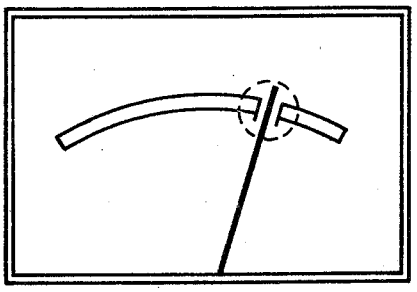

DOLBY LEVEL METER

Playback Amplifier Input-Output Characteristic Adjustment

- The AN-80 varies the input-output characteristics in accordance with the level or frequency of the input signal as it produces a record signal. In the playback mode, the reverse takes place to restore the signal to its original state.
  The procedure for adjusting the playback amplifier follows.
  Follow the procedure for L channel first and then for R channel.
- Connect the test equipment as shown in the diagram.

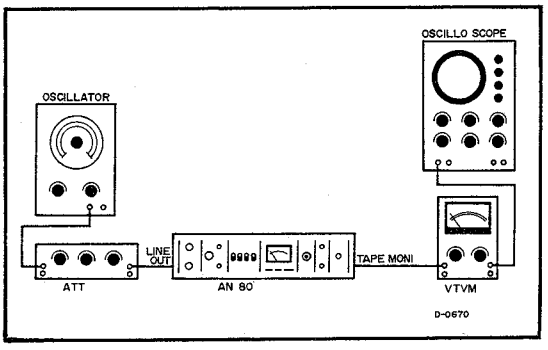

- Place the L channel PLAY CAL variable resistor of the AN-80 in the fully clockwise position and set the MODE switch to PLAY.
- Set the AF oscillator frequency at 100 Hz and the output voltage at -20 dB (0 dB = 0.775 V).
- Adjust the ATT so the AN-80 level meter's pointer will indicate the reference level.
- At this point, read the output level on the voltmeter and let this value be 0 dB.
- Set the AF oscillator frequency at 3 kHz and apply 20 dB attenuated signal, using the ATT.
- Adjust VR-101 so the AC voltmeter will indicate -27 dB. VR-101 and VR-103 will interact with each other, coordinate or alternate their adjustment until the specified value is obtained at the respective points. Note that 0 dB also is affected.
- Set the AF oscillator frequency at 5 kHz and apply 30 dB attenuated signal, using the ATT.
- Adjust VR-103 so that AC voltmeter will indicate -40 dB.
- After L channel adjustment, change connections to R channel, set the R channel MODE switch to PLAY and the METER switch to R.
- Repeat the same procedures for R channel. (VR-102/104)

Multiplex Filter Adjustment

- When an FM tuner is used as a program source, the AN-80 could malfunction because of the leak carrier of the FM multiplex circuit. To eliminate this, the AN-80 has a built-in filter circuit. The procedure for adjusting this filter circuit follows.
- Connect the devices as shown. Set the MODE switches to REC.
- Set the AF oscillator frequency at 100 Hz and the output voltage at -20 dB (0 dB = 0.775V).
  Adjust the ATT so the AN-80 level meter's pointer will indicate the reference level.
- At this point, read the output level on the voltmeter and let this value be 0 dB.
- Set the AF oscillator frequency at 19kHz±1% or less and adjust L-103 for a minimum.
- After L channel adjustment, change connections to R channel and set the METER switch to R.
- Repeat the same procedures and adjust L-104 for a minimum. (L-101 and L-102 need not be adjusted.)

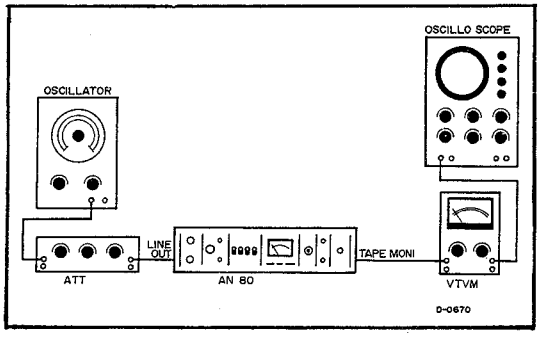

MAIN CHASSIS

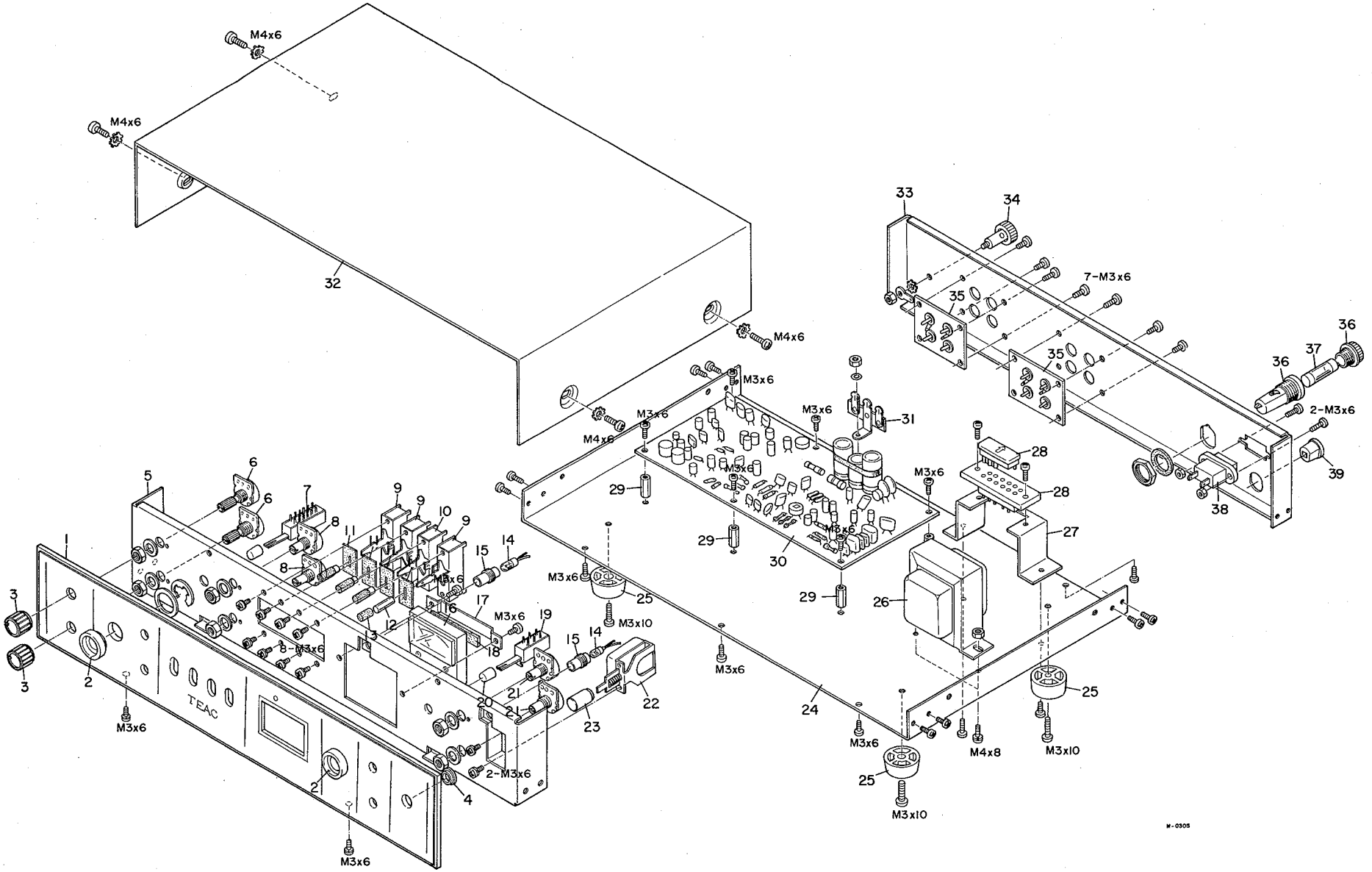

PARTS LIST

REF. NO.	TEAC PARTS NO.	DESCRIPTION	1st	2nd	3rd
1	57240320	Front Panel Assy			
2	57240360	Ring, Push Knob Safty			
3	57240370	Knob, H			
4	50928730	Escutcheon, Power Switch			
5	57240880	Chassis, Front			
6	57240160	Control, Rec Level			
7	50443710	Switch, Push, A			
8	57240170	Control, Rec Calibration			
9	50936690	Switch, Lever			
10	50937580	Switch, Lever			
11	50937220	Sheet, Lever Switch			
12	57240380	Knob, Lever Switch			
13					
14	50414500	Lamp, Pilot			
15	50834240	Cushion, Lamp			
16	57240180	Meter, Level			
17	57240190	Meter Holder			
18	57240200	Cushion, Meter			
19	50443700	Switch, Push, B			
20		Knob			
21	57240210	Control, Play Calibration			
22	50443210	Switch, Power			
23	50937270	Knob, Power Switch			
24	57240220	Chassis, Main			
25	50287730	Mount Foot			
26	57240230	Transformer, Power			
27	57240840	Voltage Selector Mount Bracket			
28		Voltage Selector			
29	57240940	Stand-off			
30	57240280	PC Board Assy, Main			
31	50452060	Terminal Strip			
32	57240240	Bonnet			
33	57240250	Panel, Back			
34	50454071	Terminal, GND			
35	50430190	Jack, Pin, US 4P			
36	50412070	Fuse Holder			
37	50411010	Fuse, 1A			
38	50431150	AC Outlet			
39	50276810	Cord Stopper			

AN-80 NOISE REDUCTION UNIT

EXPLODED VIEW AND PARTS LIST

AN-80

- SCHEMATIC DIAGRAM
- PRINTED CIRCUIT BOARD
- BROCK DIAGRAM
- PARTS LIST

SCHEMATIC DIAGRAM

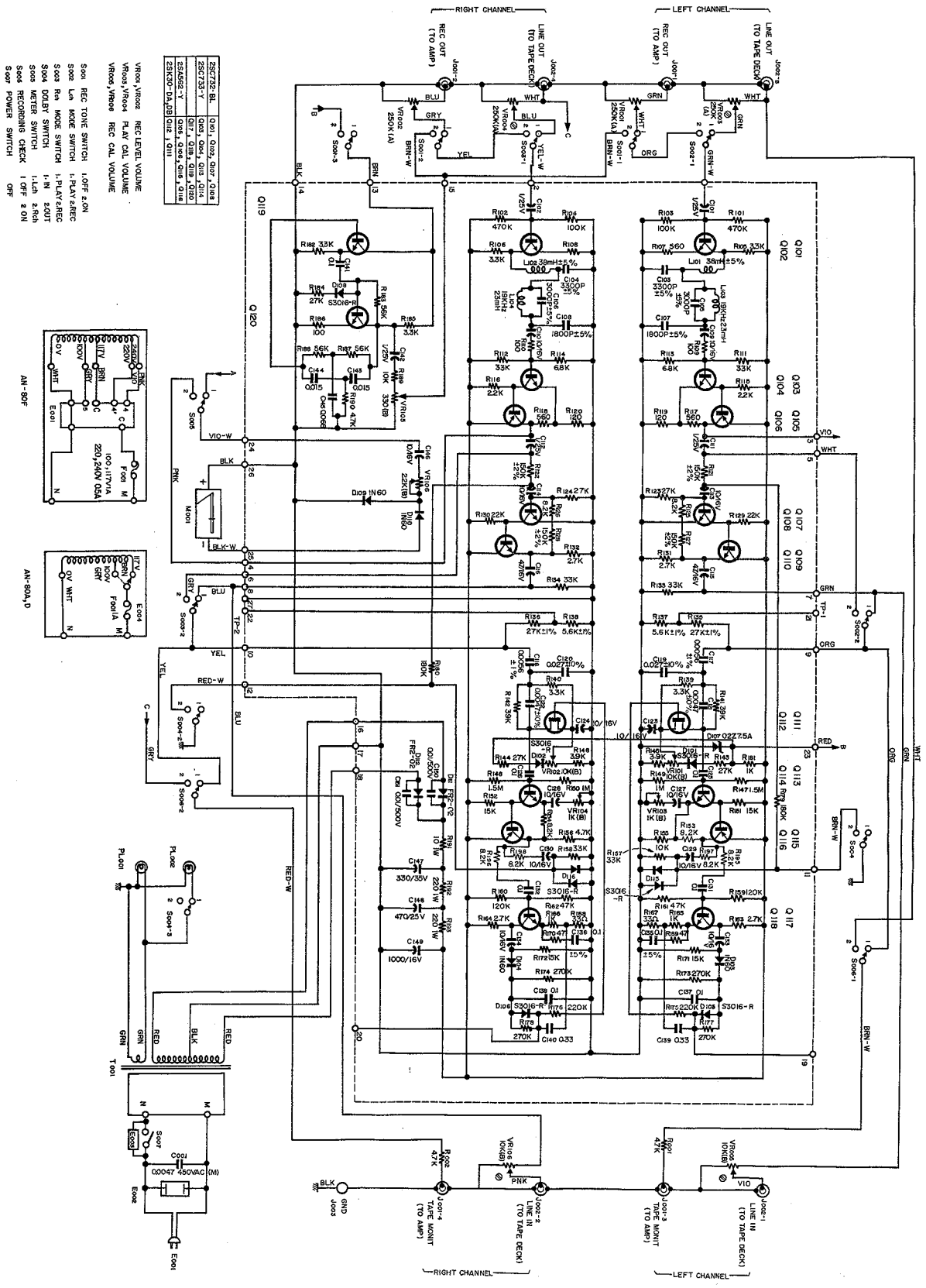

PRINTED CIRCUIT BOARD
DOLBY UNIT AMPLIFIER

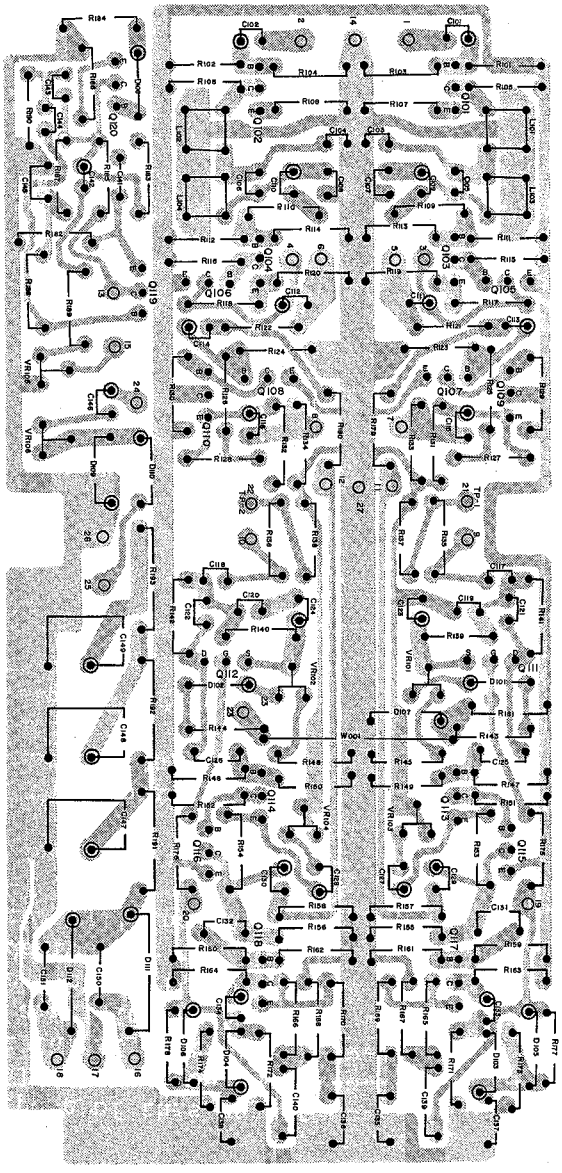

BLOCK DIAGRAM

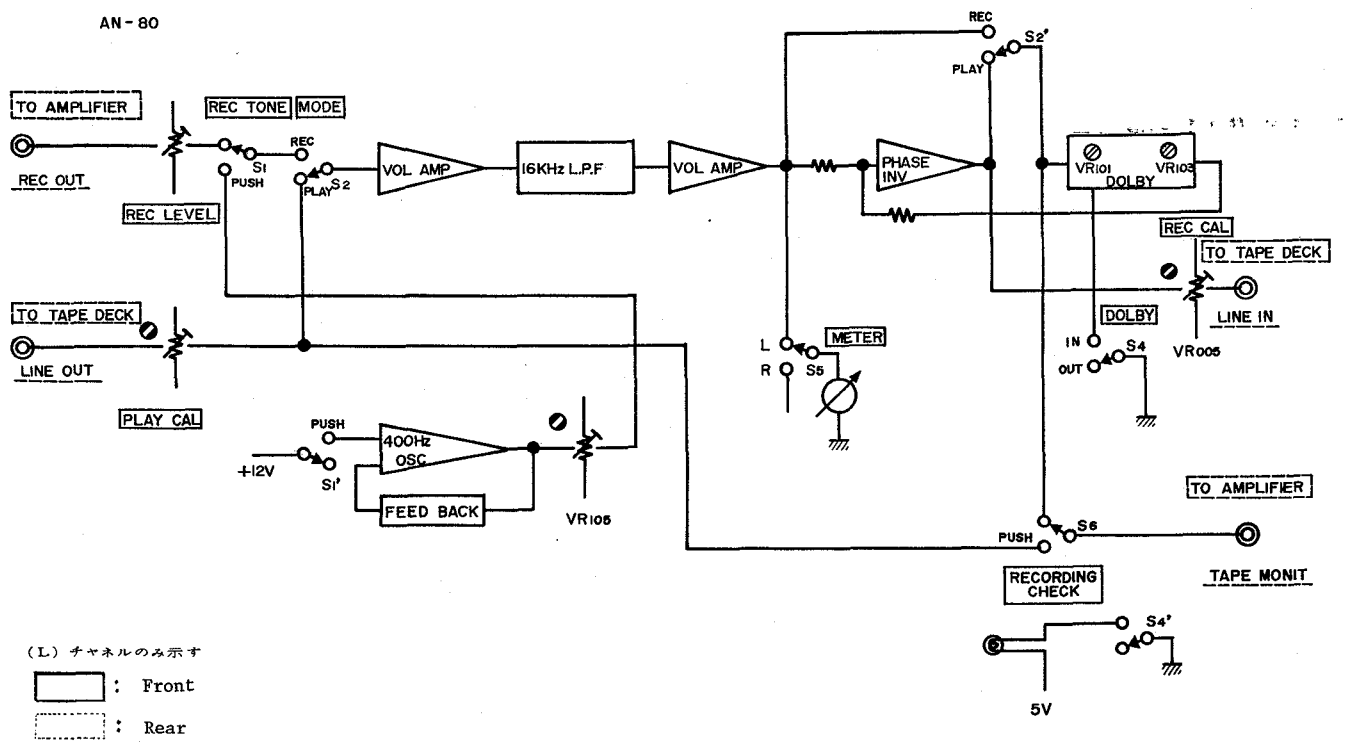

	Q 101 Q 102 2SC 732BL	Q 103 Q 104 2SC 733Y	Q 105 Q 106 2SA 562Y	Q 107 Q 108 2SC 732BL	Q 109 Q 110 2SC 732BL	Q 113 Q 114 2SC 733Y	Q 115 Q 116 2SA 562Y	Q 117 Q 118 2SC 733Y	Q 119 2SC 733Y	Q 120 2SC 733Y		Q 111 Q 112 2SK 30Y
EMITTER	1.15V	1.23V	12.07V	0 V	5.88V	7.58V	12.06V	1.75V	1.64V	0.14V	DRAIN	1.42V
BASE	1.75V	1.80V	11.42V	0.54V	6.47V	7.85V	11.43V	2.33V	2.20V	0.76V	GATE	0.10V
COLLECTOR	5.31V	11.42V	6.77V	6.47V	12.07V	11.43V	7.16V	7.50V	7.29V	2.49V	SOURCE	1.42V

NOTE

All voltages measured with a VTVM at no signal.
TEST voltages are average values with a 20% tolerance.

PARTS LIST

CIRCUIT REF.NO.	TEAC PARTS NO.	DESCRIPTION	1st	2nd	3rd
		FRONT PANEL SECTION			
	57240320	Front Panel Assy			
	57240330	Panel, Front			
	57240360	Ring, Push Button Safty			
	50937960	Lens, Lamp			
	50928730	Escutcheon, Power Switch			
	50937270	Push Button, Power SW			
	57240370	Knob, Record Level			
	57240380	Knob, Lever Switch			
	50937220	Sheet, Lever SW Protector			
		FRONT CHASSIS SECTION			
	57240880	Chassis, Front			
VR001/002	57240160	Potentiometer, Rec Level 250kΩ A			
S001	50443710	Switch, Push, A			
VR005/006	57240170	Potentiometer, Rec Calibration 10kΩ B			
S002·003	50936690	Switch, Lever			
S004	50937580	Switch, Lever, Dolby			
S005	50936690	Switch, Lever			
PL001·002	50414500	Lamp, 5ϕ			
	50834240	Cushion, Lamp			
M001	57240180	Meter, Level			
	57240190	Meter Holder			
	57240200	Cushion, Meter			
S006	50443700	Switch, Push, B			
VR003/004	57240210	Potentiometer, Play Calibration 250kΩ A			
S007	50443210	Switch, Power			
E003	50529060	Spark Killer			
		MAIN CHASSIS SECTION			
	57240220	Chassis, Main			
	57240940	Stand-off			
	50452060	Terminal Strip, 1L2P			
T001	57240230	Transformer, Power			
	57240820	Transformer, Power (Foreign only)			
	50287730	Mount Foot			
	57240240	Bonnet			
R001·002	50513970	Resistor, Carbon 4.7kΩ 1/4P			

PARTS LEST

CIRCUIT REF.NO.	TEAC PARTS NO.	DESCRIPTION	1st	2nd	3rd
	REAR PANEL SECTION				
	57240250	Panel, Rear			
J003	50454071	Terminal, Ground			
J001·002	50430190	Jack, Pin, US 4P			
	50412070	Fuse Holder			
	50412130	Fuse Holder (US Market only)			
F001	50411010	Fuse, 1A (AC 100, 117V area)			
	50411260	Fuse, 0.5A(AC 220,240V area)			
E002	50431150	AC Outlet			
E001	50471651	Cord, AC			
C001	50541110	Cap., UL Oil Filled 0.0047μF 450V AC			
	50927610	Voltage Selector(Foreign only)			

PARTS LIST
DOLBY UNIT AMPLIFIER

CIRCUIT REF.NO.	TEAC PARTS NO.	DESCRIPTION	1st	2nd	3rd
	57240280	PC Board Assy, Dolby Unit Amp			
	SILICON TRANSISTORS				
Q101/102	50423660	2SC732-BL			
Q103/104	50423510	2SC733-Y			
Q105/106	50423520	2SA562-Y			
Q107/108	50423660	2SC732-BL			
Q109/110	50423660	2SC732-BL			
Q111/112	50939410	FET 2SK30-Y			
Q113/114	50423510	2SC733-Y			
Q115/116	50423520	2SA562-Y			
Q117/118	50423510	2SC733-Y			
Q119/120	50423510	2SC733-Y			
	DIODES				
D101/102	50422440	Silicon, S3016-R			
D103/104	50422130	Germanium, 1N60			
D105/106	50422440	Silicon, S3016-R			
D107	50422640	Zener, 02Z 7.5A			
D108	50422440	Silicon, S3016-R			
D109/110	50422130	Germanium, 1N60			
D111/112	50422340	Silicon, FR2-02			
	CARBON RESISTORS				
ALL RESISTORS IN OHM, 10% TOLERANCE, 1/4 WATT AND CARBON TYPE UNLESS OTHERWISE NOTED.					
R101/102	50518370	470k			
R103/104	50513700	100k			
R105/106	50513960	3.3k			
R107/108	50513910	560			
R109/110	50513300	100			
R111/112	50519440	39k			
R113/114	50519230	6.8k			
R115/116	50513950	2.2k			
R117/118	50513910	560			
R119/120	50513310	120			
R121/122	50513720	150k			
R123/124	50513890	18k			
R125/126	50513890	18k			
R127/128	50513720	150k			
R129/130	50513590	15k			
R131/132	50518050	2.7k			
R133/134	50519170	33k			
R135/136	50513860	27k			
R137/138	50513880	5.6k			
R139/140	50513960	3.3k			
R141/142	50519440	39k			
R143/144	50513860	27k			

PARTS LIST
DOLBY UNIT AMPLIFIER

CIRCUIT REF.NO.	TEAC PARTS NO.	DESCRIPTION	1st	2nd	3rd
R145/146	50513940	3.9k			
R147/148	50518370	470			
R149/150	50513820	1M			
R151/152	50513590	15k			
R153/154	50518830	8.2k			
R155/156	50513970	4.7k			
R157/158	50519170	33k			
R159/160	50518370	470k			
R161/162	50519580	220k			
R163/164	50518050	2.7k			
R165/166	50513430	1k			
R167/168	50518690	22			
R169/170	50519610	47			
R171/172	50513590	15k			
R173/174	50518890	270k			
R175/176	50513570	10k			
R177/178	50518890	270k			
R179/180	50518380	180k			
R181	50513430	1k			
R182	50513960	3.3k			
R183	50513990	56k			
R184	50513860	27k			
R185	50513960	3.3k			
R186	50513300	100			
R187	50513870	47k			
R188	50513870	47k			
R189	50513570	10k			
R190	50513970	4.7k			
R191	50525460	Metal Oxide Film 10 1W			
R192/193	50527100	Metal Oxide Film 220 1W			
	TRIMMER RESISTORS				
VR101/102	50533480	10kΩ B			
VR103/104	50533530	1kΩ B			
VR105	50533760	330Ω B			
VR106	50533640	2.2kΩ B			

PARTS LIST
DOLBY UNIT AMPLIFIER

CIRCUIT REF.NO.	TEAC PARTS NO.	DESCRIPTION	1st	2nd	3rd
		CAPACITORS			
ALL CAPACITORS IN MICRO FARADS UNLESS OTHERWISE NOTED.					
C101/102	50554810	Elec. 1 25V			
C103/104	50548450	Mylar 0.0022 50V			
C105/106	50543400	Polyst. 3300p 50V			
C107/108	50548120	Mylar 0.0015 50V			
C109/110	50554050	Elec. 10 16V			
C111/112	50554810	Elec. 1 25V			
C113/114	50554050	Elec. 10 16V			
C115/116	50554430	Elec. 4.7 16V			
C117/118	50548260	Mylar 0.0056 50V			
C119/120	50548330	Mylar 0.027 50V			
C121/122	50548130	Mylar 0.0047 50V			
C123/124	50554050	Elec. 10 16V			
C125/126	50548040	Mylar 0.1 50V			
C127/128	50554050	Elec. 10 16V			
C129/130	50554050	Elec. 10 16V			
C131/132	50548040	Mylar 0.1 50V			
C133/134	50554050	Elec. 10 16V			
C135/136	50548040	Mylar 0.1 50V			
C137/138	50548040	Mylar 0.1 50V			
C139/140	50548830	Metalized Mylar 0.33 50V			
C141	50548040	Mylar 0.1 50V			
C142	50554810	Elec. 1 25V			
C143·144	50548420	Mylar 0.015 50V			
C145	50548270	Mylar 0.047 50V			
C146	50554050	Elec. 10 16V			
C147	50554650	Elec. 330 35V			
C148	50554420	Elec. 470 25V			
C149	50554890	Elec. 1000 16V			
C150	50542230	Ceramic 0.01 500V			
C151	50542230	Ceramic 0.01 500V			
		COILS			
L101/102	57240300	L.P.F. 36mH (White)			
L103/104	57240310	19kHz (Yellow)			